International Journal of Applied Earth Observation and Geoinformation 146 (2026) 105099

Contents lists available at ScienceDirect

International Journal of Applied Earth Observation and Geoinformation

journal homepage: www.elsevier.com/locate/jag

DEM super-resolution guided by high-resolution remote sensing images using multitask learning

Wei Liu [a], Yuhang Zhong [a], Shida Zhao [a], Songling Luo [a], Yongtao Yu [b], Xiaomei Zhong [a], Weikai Tan [d], Haiyan Guan [c], Hongjie He [d,e,*], Jonathan Li [d,e,**]

[a] School of Information and Software Engineering, East China Jiaotong University, Nanchang, JX 330013, China
[b] Computer and Software Engineering, Huaiyin Institute of Technology, Huaian, JS 223003, China
[c] School of Remote Sensing and Geomatics Engineering, Nanjing University of Information Science and Technology, Nanjing 210044, China
[d] Department of Geography and Environmental Management, University of Waterloo, Waterloo, ON N2L 3G1, Canada
[e] Key Laboratory of Geographic Information Sciences (Ministry of Education), East China Normal University, Shanghai 200241, China

ARTICLE INFO

Dataset link: https://github.com/YuspaceCraft/DEMSR

Keywords:
DEM super-resolution
Guided super-resolution
Attention mechanism
Cross-modal learning

ABSTRACT

High-resolution digital elevation models (DEMs) are critical for applications such as environmental monitoring and urban planning, motivating the development of advanced DEM super-resolution (SR) techniques. While recent methods have shown promising results, effectively exploiting high-resolution remote sensing images (HRSIs) to guide DEM SR remains challenging, and progress has been hindered by the lack of large-scale, open-source benchmark datasets. We propose GSRMTL, a novel and parameter-efficient multi-task learning framework for HRSI-guided DEM SR. Given a low-resolution DEM and a paired HRSI, GSRMTL jointly performs DEM SR and semantic segmentation of the optical imagery, where segmentation acts as an auxiliary task to provide semantic priors for elevation reconstruction. To address the dataset bottleneck, we introduce GDEMSR, the first large-scale benchmark dataset specifically designed for HRSI-guided DEM SR. Extensive experiments on GDEMSR and the RGB-guided depth SR benchmark NYU-v2 demonstrate that GSRMTL consistently outperforms state-of-the-art methods while using significantly fewer parameters, highlighting its effectiveness and practical deployment potential.

1. Introduction

Digital Elevation Models (DEMs) are a fundamental geospatial data product and play a critical role in a wide range of applications, including land-use planning, environmental monitoring, flood modeling, disaster response, and resource management (Tan et al., 2024). High-resolution (HR) DEMs are particularly valuable, as they provide fine-grained topographic details that are essential for accurately characterizing terrain structures such as ridges, valleys, and slopes. However, acquiring HR DEMs typically relies on costly and time-consuming technologies (e.g., airborne LiDAR or photogrammetry), which limits their availability, especially over large or remote regions.

To alleviate this limitation, DEM super-resolution (DEM SR) has been extensively studied as an efficient alternative for enhancing low-resolution (LR) DEMs. Early DEM SR approaches were primarily interpolation-based, such as bilinear or bicubic interpolation, but these methods tend to oversmooth terrain and fail to preserve geomorphological structures (Demiray et al., 2021). More recently, learning-based DEM SR methods, particularly those based on convolutional neural networks (CNNs) and generative models, have demonstrated superior performance by learning complex spatial patterns directly from data (Demiray et al., 2021; Wu et al., 2021; Yao et al., 2024). Despite these advances, single-modality DEM SR remains fundamentally ill-posed, as critical high-frequency terrain details are often missing from LR elevation inputs alone.

To address this challenge, an increasing number of research has explored *knowledge-guided* DEM SR, where additional prior information is incorporated to regularize and guide elevation reconstruction. Such knowledge can take various forms, including terrain-aware constraints, geomorphological priors, physical models, or auxiliary data sources (Zhang et al., 2022; Cong et al., 2024). Within this broader paradigm, image-guided DEM SR can be regarded as a data-driven instantiation of knowledge-guided DEM SR, where high-resolution remote sensing images (HRSIs) provide dense, spatially aligned semantic and structural knowledge about the Earth's surface. HRSIs encode rich

* Corresponding author at: Department of Geography and Environmental Management, University of Waterloo, Waterloo, ON N2L 3G1, Canada.
** Corresponding author at: Key Laboratory of Geographic Information Sciences (Ministry of Education), East China Normal University, Shanghai 200241, China.
E-mail addresses: hongjie.he@uwaterloo.ca (H. He), junli@uwaterloo.ca (J. Li).

https://doi.org/10.1016/j.jag.2026.105099
Received 13 October 2025; Received in revised form 24 December 2025; Accepted 7 January 2026
Available online 23 January 2026
1569-8432/© 2026 The Authors. Published by Elsevier B.V. This is an open access article under the CC BY-NC license (http://creativecommons.org/licenses/by-nc/4.0/).

contextual cues such as land cover, object boundaries, textures, and man-made structures, all of which are strongly correlated with elevation variations and thus highly informative for DEM reconstruction.

Although the potential of HRSI-guided DEM SR has been increasingly recognized (Gao et al., 2025), this research direction remains relatively underexplored compared to guided super-resolution (GSR) in natural scenes, particularly RGB-guided depth super-resolution (Kubade et al., 2020; Tan et al., 2024; Wang et al., 2024b). Existing HRSI-guided DEM SR methods are often designed as single-task models and primarily focus on feature fusion strategies, without explicitly exploiting high-level semantic knowledge embedded in optical imagery. Meanwhile, multitask learning has shown strong effectiveness in leveraging task relatedness to improve representation learning across various computer vision problems (Liu et al., 2024). However, its potential for HRSI-guided DEM SR remains largely unexplored, partly due to the additional annotation burden and the lack of suitable benchmark datasets.

In this paper, we propose GSRMTL, a novel multitask learning framework for HRSI-guided DEM SR, where DEM super-resolution is treated as the primary task and semantic segmentation of the HRSI serves as an auxiliary task. By jointly learning these two tasks, the model leverages semantic information as high-level visual knowledge to guide elevation reconstruction. Given an LR DEM paired with an HRSI, GSRMTL simultaneously performs DEM SR and semantic segmentation. The framework consists of two main components: (1) an HRSI guidance subnetwork that extracts hierarchical semantic features from the optical image, and (2) a DEM recovery subnetwork that enhances elevation resolution through attention-based multimodal fusion of visual and geometric features. This design enables effective integration of complementary knowledge from both modalities, resulting in improved spatial accuracy and structural fidelity of the reconstructed DEM.

To further facilitate research in this area, we introduce GDEMSR, the first large-scale benchmark dataset specifically designed for HRSI-guided DEM SR. Constructed from multiple independent real-world projects, GDEMSR provides geographically and topographically diverse RGB–DEM pairs, enabling robust training, fair evaluation, and reproducible comparison of future methods.

The main contributions of this work are summarized as follows:

- We propose GSRMTL, a multitask learning framework for HRSI-guided DEM SR that exploits semantic segmentation as a form of data-driven knowledge guidance, integrated via an attention-based fusion mechanism.
- We construct GDEMSR, the first large-scale open-source benchmark dataset for HRSI-guided DEM SR, built from multiple real-world remote sensing projects.
- Extensive experiments on GDEMSR and the RGB-guided depth SR benchmark NYU-v2 demonstrate that GSRMTL achieves superior or competitive performance compared with state-of-the-art methods.
- To promote reproducibility and further research, both the GSRMTL source code and the GDEMSR dataset will be publicly released upon publication.

2. Related work

2.1. DEM SR

Machine learning has become the dominant approach for DEM SR, with models learning mappings between LR and HR DEMs. Convolutional neural networks (CNNs) (Demiray et al., 2021; Yao et al., 2024) are widely used for their ability to capture hierarchical spatial features, while advanced architectures—such as GANs (Wu et al., 2021; Zheng et al., 2024), attention-based models (Chen et al., 2024), and transformers (Li et al., 2023; Wang et al., 2024a)—further enhance reconstruction by focusing on key regions and fine details. For example, Wu et al. (2021) created a real-world DEM SR dataset and introduced an enhanced SR-GAN with perceptual loss and logarithmic normalization. EBCF-CDEM (Yao et al., 2024) employs an encoder–decoder with positional encoding to capture high-frequency terrain details, using a loss function that enforces both pixel accuracy and surface continuity.

The attention-based CIASR model (Chen et al., 2024) enhances DEM SR by combining channel-spatial and self-attention to capture local and global dependencies, using residual and deformable convolution modules for improved reconstruction. DSRT (Li et al., 2023) introduces window attention and a GeoTransform module to refine spatial alignment and terrain accuracy, while TTSR (Wang et al., 2024a) employs transformers with local–global deformable blocks and spatio-channel attention to handle multiscale topographic features.

Despite these advances, standalone DEM SR methods underuse complementary spatial data, motivating guided super-resolution (GSR) approaches that integrate multimodal inputs. Several works (Argudo et al., 2018; Kubade et al., 2020; Tan et al., 2024; Paul and Gupta, 2024) leverage HR optical images (HRSIs) to enhance DEM reconstruction. For example, Argudo et al. (2018) use a hierarchical FCN to fuse multiscale DEM–HRSI features, while Kubade et al. (2020) propose an Attentional Feedback Network that selectively injects high-frequency details from HRSIs. Tan et al. (2024) predict elevation differences from HRSIs to refine interpolated DEMs, and AIMSR (Gao et al., 2025) employs modality-aware fusion for adaptive enhancement. SiRAN (Paul and Gupta, 2024) integrates frequency-selective graph attention and GAN-based optimization to improve convergence and guide-image attention.

Beyond HRSIs, other modalities such as shaded relief images (SRIs) have been used, e.g., AHTF (Huang et al., 2024) fuses DEM and SRI features via attention-based modules. However, HRSIs remain the most accessible and information-rich modality. Despite recent progress, effectively exploiting HRSIs for DEM SR remains challenging, compounded by the lack of large-scale benchmark datasets for fair and reproducible evaluation.

2.2. Guided SR

GSR enhances the resolution of an LR target image by leveraging an HR guidance image—typically optical or RGB—that provides spatial and contextual cues missing from the target.

Inspired by guided depth map SR, GSR methods are generally categorized as filtering-based, optimization-based, or learning-based (Zhong et al., 2023). Filtering-based methods refine the LR target using texture or intensity information from the guidance image through bilateral, non-local, guided, or dynamic filters. Optimization-based approaches formulate the upscaling task as an energy minimization problem with priors such as graph Laplacians (De Lutio et al., 2022; Wang et al., 2021).

Learning-based methods directly learn mappings from LR to HR outputs and are classified into dictionary learning–based (Deng and Dragotti, 2019) and deep learning–based approaches (Zhong et al., 2021; Wang et al., 2024c). The former learns sparse dictionaries from paired data, while the latter uses neural networks to model complex non-linear relations and restore fine details automatically.

Recent deep learning-based GSR methods enhance reconstruction by improving multi-modal fusion and multi-task learning strategies. Fusion mechanisms are typically single-level (Li et al., 2019; Kim et al., 2021)—which combine features once—or multi-level (Zuo et al., 2021; Yan et al., 2022), which progressively integrate hierarchical features to capture fine details and global context. For example, MIG-Net (Zuo et al., 2021) and AHMF (Zhong et al., 2021) employ hierarchical attention to refine features, while DEAF-Net (Liu et al., 2021) uses deformable convolutions for adaptive alignment and multi-scale fusion.

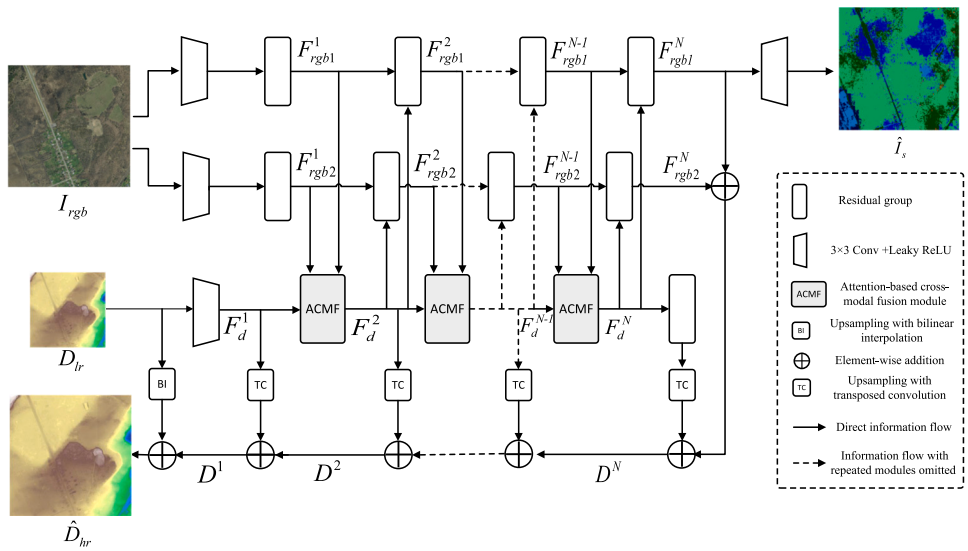

Fig. 1. Overview of the GSRMTL framework. Given an LR DEM D_{lr} and an HR optical image I_{rgb} as inputs, GSRMTL produces an HR DEM $\hat{D}_{hr}$ and a semantic segmentation map (i.e., land-cover map) of the scene. The semantic segmentation task is designed as an auxiliary task to enhance DEM SR within the multitask learning. In the HRSI guidance subnetwork, the HRSI I_{rgb} is processed through two branches with identical architectures. One branch generates a semantic segmentation map, while the other focuses exclusively on DEM SR.

Multi-task learning frameworks further enhance SR by jointly training auxiliary tasks. BridgeNet (Tang et al., 2021) combines depth refinement and monocular depth prediction, while IDSR (Yan et al., 2022) uses depth completion as an auxiliary task with correlation learning and iterative cross-task information sharing.

Despite these advances, the potential of multi-task learning for GSR in remote sensing remains underexplored. Existing methods only partially exploit cross-task and cross-modal synergies, and progress is hindered by the absence of large-scale, open-source datasets for fair evaluation. This work aims to address these gaps and advance the SOTA in remote sensing-based GSR.

3. The proposed framework

3.1. Network architecture

Formally, let h, w, and s represent the height, width, and scaling factor, respectively. As illustrated in Fig. 1, given an LR DEM $D_{lr} \in R^{h\times w\times 1}$ paired with an HRSI $I_{rgb} \in R^{sh\times sw\times 1}$ as the guidance, our GSRMTL generates an HR DEM $\hat{D}_{hr}$ and a semantic segmentation map $\hat{I}_s \in R^{sh\times sw\times 1}$ for the scene. The semantic segmentation task is formulated as an auxiliary task to enhance the prime task of DEM SR.

The network architecture comprises two core subnetworks: an HRSI guidance subnetwork that extracts high-level semantic features from the optical image, and a DEM recovery subnetwork that utilizes multimodal fusion to enhance the DEM's spatial resolution. Both branches are built upon residual groups (Zhang et al., 2018) as fundamental feature learning modules.

Multimodal feature extraction. In the HRSI guidance subnetwork, the input HRSI I_{rgb} is processed by two parallel branches with identical architectures but task-specific supervision. One branch is optimized for semantic segmentation, encouraging the extraction of high-level, region-consistent semantic features, while the other is dedicated to DEM SR and focuses on fine-grained spatial and textural details. Although structurally identical, the two branches learn complementary representations due to their distinct objectives. This design mitigates task interference and provides richer, more diverse visual cues to better support elevation reconstruction.

A convolution module sequentially processes each branch of the HRSI guidance subnetwork and then a residual group. This process generates features F^1_{rgb1} and F^1_{rgb2}, respectively. The LR DEM D_{lr} is fed into a convolution module in the DEM recovery subnetwork, yielding F^1_d. The convolution module in each branch consists of a 3×3 convolutional layer followed by a Leaky ReLU activation function layer. Let f_{Conv} and f_{rg} denote the convolution operation and the residual group operation, and the aforementioned residual group operations can be formulated as follows:

$$\begin{aligned} F^1_{rgb1} &= f_{rg}(f_{Conv}(I_{rgb})), \\ F^1_{rgb2} &= f_{rg}(f_{Conv}(I_{rgb})), \\ F^1_d &= f_{Conv}(D_{lr}). \end{aligned} \tag{1}$$

Subsequently, additional residual groups process F^1_{rgb1} and F^1_{rgb2} further, yielding the refined features F^2_{rgb1} and F^2_{rgb2}, respectively.

Multimodal feature fusion. Meanwhile, single-modal features F^1_{rgb1}, F^1_{rgb2}, and F^1_d are combined in the attention-based cross-modal fusion (ACMF) module to refine the DEM feature F^1_d, resulting in the feature F^2_d:

$$F^2_d = ACMF(F^1_{rgb1}, F^1_{rgb2}, F^1_d). \tag{2}$$

The ACMF module plays a crucial role in adaptively integrating complementary cues from the HRSI and the DEM. By leveraging attention mechanisms, it highlights consistent structures while suppressing modality-inconsistent components in a learnable manner. This ensures that the fused feature F^2_d captures high-frequency spatial details and semantic context more effectively.

Subsequently, F^2_d is fused with F^1_{rgb1} and F^1_{rgb2} via two separate residual groups, producing updated features F^2_{rgb1} and F^2_{rgb2}, respectively. By applying a total of N residual groups in each branch of the HRSI subnetwork, we obtain two multiscale feature sequences: $\{F^i_{rgb1}\}^N_{i=1}$ and $\{F^i_{rgb2}\}^N_{i=1}$. Simultaneously, by applying N ACMF modules within the DEM subnetwork, a corresponding multiscale DEM feature sequence $\{F^i_d\}^N_{i=1}$ is generated.

Multitask prediction outputs. The feature F^N_{rgb1} is input into the semantic segmentation head to predict the HRSI semantic segmentation map $\hat{I}_s$. The HR DEM $\hat{D}hr$ is obtained by progressively fusing multiscale DEM features $\{F^i_d\}^N_{i=1}$ with F^N_{rgb1} and F^N_{rgb2} through a cascade of residual and upsampling operations, followed by the addition of the bilinearly upsampled LR DEM D_{lr}. The process of obtaining $\hat{D}_{hr}$ can be formulated

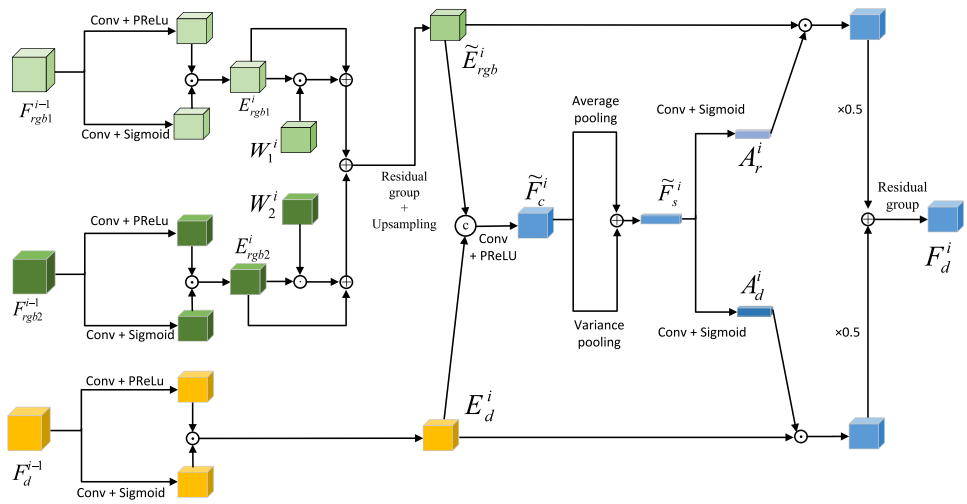

Fig. 2. Illustration of the ACMF module. The ACMF module effectively combines complementary information from HRSI (F^{i-1}_{rgb1} and F^{i-1}_{rgb2}) and DEM (F^{i-1}_{d}) to produce a refined DEM feature (F^{i}_{d}).

as follows:

$$\begin{aligned} D^N &= F^N_{rgb1} + F^N_{rgb2} + f_{us}(f_{rg}(F^N_d)), \\ D^{i-1} &= f_{rg}(D^i) + f_{us}(F^i_d) \quad for\ i \in \{2, \cdots, N\}, \\ \hat{D}_{hr} &= D^1 + f_{bi}(D_{lr}), \end{aligned} \tag{3}$$

where $f_{us}(\cdot)$ represents the upsampling operation with transposed convolution, and $f_{bi}(\cdot)$ is the bilinear interpolation operation.

3.2. Attention-based cross-modal fusion

The HRSI provides fine spatial and semantic cues, while the DEM encodes elevation information. To integrate these complementary modalities, we introduce an attention-based cross-modal fusion (ACMF) module that jointly captures spatial, semantic, and geometric cues to support DEM SR.

Specifically, the ACMF module enhances DEM features by selectively incorporating HR information from the HRSI through an attention-driven mechanism. As illustrated in Fig. 2, for each $i \in \{2, \ldots, N\}$, the features F^{i-1}_{rgb1}, F^{i-1}_{rgb2}, and F^{i-1}_{d} are fed into the ACMF module to refine the DEM feature representation, resulting in an enhanced feature F^i_d. The process begins with gated units that enhance modality-specific features. Next, cross-modal similarity is computed through a normalized inner product to derive attention weights, which selectively highlight informative HRSI features. Finally, a multimodal feature squeezing-and-excitation mechanism integrates the fused information, producing refined DEM features that are more effective for SR tasks.

Feature enhancement. To enhance the input features F^i_{rgb1}, F^i_{rgb2}, and F^i_d, we employ gated feature units inspired by Yu et al. (2019), which enable controlled and adaptive feature propagation through the network. This mechanism allows the model to dynamically emphasize informative features while suppressing less relevant ones, thereby improving the overall robustness and representational capacity of the network.

The enhancement process is governed by the following formulation:

$$\begin{aligned} E^i_{rgb1} &= f_{pr}(W^{i,1}_{rgb1} * F^{i-1}_{rgb1} + b^{i,1}_{rgb1}) \odot f_\delta(W^{i,2}_{rgb1} * F^{i-1}_{rgb1} + b^{i,2}_{rgb1}), \\ E^i_{rgb2} &= f_{pr}(W^{i,1}_{rgb2} * F^{i-1}_{rgb2} + b^{i,1}_{rgb2}) \odot f_\delta(W^{i,2}_{rgb2} * F^{i-1}_{rgb2} + b^{i,2}_{rgb2}), \\ E^i_d &= f_{pr}(W^{i,1}_{d} * F^{i-1}_{d} + b^{i,1}_{d}) \odot f_\delta(W^{i,2}_{d} * F^{i-1}_{d} + b^{i,2}_{d}), \end{aligned} \tag{4}$$

where $\odot$ denotes element-wise multiplication; f_{pr} and f_δ represent the Parametric ReLU (PReLU) activation function (He et al., 2015) and the sigmoid function, respectively; and $*$ indicates the convolution operation. The convolutional kernels are initialized using He normal initialization (He et al., 2015), biases are set to zero, and the learnable slopes of the PReLU activations are initialized to the default value of 0.25, following He et al. (2015).

Each gate branch learns a spatially adaptive weight map via the sigmoid function, modulating the features produced by the PReLU-activated transformation branch. This structure enables the network to preserve important feature patterns while adaptively suppressing noise or irrelevant information. As a result, the enhanced outputs E^i_{rgb1}, E^i_{rgb2}, and E^i_d provide refined representations of the original features F^{i-1}_{rgb1}, F^{i-1}_{rgb2}, and F^{i-1}_{d}, respectively, facilitating more accurate subsequent processing steps such as attention fusion and DEM SR reconstruction.

Cross-modal feature similarity calculation. Subsequently, we compute the similarity between E^i_{rgb1} and E^i_d, as well as between E_{rgb2} and E^i_d. Specifically, we first downsample E^i_{rgb1} and E_{rgb2} to match the spatial resolution of E^i_d. These features are then unfolded into $h \times w$ patches, along the channel dimension. Next, we compute the similarity between corresponding patches from E^i_{rgb1} and E^i_d, and from E_{rgb2} and E^i_d, using the normalized inner product. For $j \in \{1, \cdots, h \times w\}$, the similarity between the jth patch r^i_j from E^i_{rgb1} and the jth patch d^i_j from E^i_d can be formulated as:

$$s^i_j = \frac{r^i_j \cdot d^i_j}{\left\|r^i_j\right\| \ \left\|d^i_j\right\|}, \tag{5}$$

where $\cdot$ denotes the inner product operation. The similarity weight matrix between E^i_{rgb1} and E^i_d is then expressed as:

$$W^i_1 = \mathcal{F}(\mathcal{C}^{h\times w}_{j=1} s^i_j), \tag{6}$$

where $\mathcal{F}$ is the fold operation, $\mathcal{C}$ denotes concatenation along the channel dimension. The calculation for the similarity weight matrix W^i_2 between E^i_{rgb2} and E^i_d is computed using the same procedure as for W^i_1.

Cross-modal attention-based feature refinement. The computed similarity matrices W^i_1 and W^i_2 serve as an attention mechanism to selectively enhance HRSI features. Specifically, patches with higher similarity scores are emphasized, allowing them to contribute more significantly to the final DEM SR reconstruction. This attention-based feature refinement process to generate the enhanced guided feature $\widetilde{E}_{rgb}$ is formalized in the following expression:

$$\widetilde{E}^i_{rgb} = f_{us}(f_{rg}(E^i_{rgb1} \odot W^i_1 + E^i_{rgb2} \odot W^i_2 + E^i_{rgb1} + E^i_{rgb2})), \tag{7}$$

where the element-wise multiplication ($\odot$) applies the learned similarity weights to scale the feature responses. The addition of the original features ensures residual learning, preserving structural details

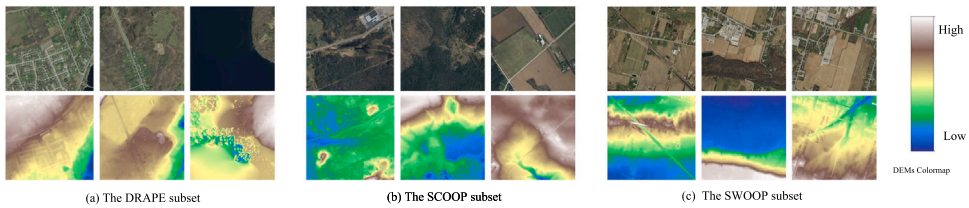

Fig. 3. High-resolution RGB-DEM pairs from the proposed GDEMSR dataset.

and stabilizing the training process. The function f_{rg} performs feature rectification, refining local inconsistencies, while f_{us} upscales and fuses the enhanced features for subsequent DEM reconstruction.

Multimodal feature squeezing and excitation. Feature squeezing can reduce dimensionality while preserving critical information and integrating cross-modality data, while feature excitation selectively enhances and refines the most informative features. In the feature squeezing step, the enhanced features are first fused to integrate complementary information from different sources. Subsequently, average pooling and variance pooling are applied to refine these features. The refined feature can be mathematically formulated as:

$$\begin{aligned} \widetilde{F}_c^i &= f_{pr}(W_c^i * C(\widetilde{E}_{rgb}^i, E_d^i) + b_c^i), \\ \widetilde{F}_s^i &= AvgPool(\widetilde{F}_c^i) + VarPool(\widetilde{F}_c^i), \end{aligned} \tag{8}$$

where W_c^i and b_c^i represent 3×3 convolutional kernel and bias term, respectively; $AvgPool(\cdot)$ denotes average pooling; $VarPool(\cdot)$ represents variance pooling.

In the feature excitation step, $\widetilde{F}_s^i$ is fed into the block to enhance the DEM feature further. This process can be mathematically described as:

$$\begin{aligned} A_d^i &= f_\sigma(W_d^i * \widetilde{F}_s^i + b_d^i), \\ A_r^i &= f_\sigma(W_r^i * \widetilde{F}_s^i + b_r^i), \\ F_d^i &= f_{rg}(0.5 \times A_d^i \odot E_d^i + 0.5 \times A_r^i \odot \widetilde{E}_{rgb}), \end{aligned} \tag{9}$$

where A_d^i and A_r^i are modality-specific attention maps that emphasize the most informative regions in the DEM and HRSI-guided features, respectively. W_d^i and W_r^i are 1×1 convolutional kernels; b_d^i and b_r^i are bias terms.

3.3. Total loss

The total loss $\mathcal{L}$ is composed of the HRSI semantic segmentation loss $\mathcal{L}_s$ and the HR DEM reconstruction loss $\mathcal{L}_d$. The semantic segmentation loss employs cross-entropy Loss, while the DEM reconstruction loss uses the L_1 Loss. Let $\{D_{lr}^i, I_{rgb}^i, D_{hr}^i, I_s^i\}_{i=1}^N$ represent the training set, which contains N LR DEM samples paired with HRSI information, semantic segmentation labels, and SR DEM labels. Given the predicted semantic segmentation masks $\{\hat{I}_s^i\}_{i=1}^N$ and the predicted DEM SR results $\{\hat{D}_{hr}^i\}_{i=1}^N$, the mathematical expression of the total loss is:

$$\begin{aligned} \mathcal{L} &= \lambda_1 \frac{1}{N} \sum_{i=1}^N \mathcal{L}_d(D_{hr}^i, \hat{D}_{hr}^i) + \lambda_2 \frac{1}{N} \sum_{i=1}^N \mathcal{L}_s(I_s^i, \hat{I}_s^i) \\ &= \lambda_1 \frac{1}{N} \sum_{i=1}^N \left\| \hat{D}_{hr}^i - D_{hr}^i \right\|_1 + \lambda_2 \frac{1}{N} \sum_{i=1}^N \sum_{c=1}^C P(c \mid I_s^i) \log P(c \mid \hat{I}_s^i), \end{aligned} \tag{10}$$

where λ_1 and λ_2 are weighting factors that balance the contributions of the two losses; C is the number of classes for the semantic segmentation task; $P(c|\hat{I}_s^i)$ and $P(c|I_s^i)$ represent the predicted and true class probabilities for semantic segmentation at pixel i; $\|\cdot\|_1$ is the L_1 norm.

4. Experiments

4.1. Datasets

We evaluate our approach and baseline methods on GDEMSR and NYU-v2 (Silberman et al., 2012). As presented in Fig. 3, the GDEMSR dataset is specifically designed to benchmark HRSI-guided DEM SR methods. NYU-v2 is a well-established benchmark dataset for RGB-guided depth SR. We assess our method on the RGB-guided depth SR dataset to demonstrate its potential in the RGB-guided depth SR task.

To address the lack of publicly available benchmarks for HRSI-guided DEM SR, we construct **GDEMSR**, the first large-scale open-source dataset dedicated to this task. GDEMSR is curated and standardized from three public sources: the 2013 South Central Ontario Orthophotography Project (SCOOP) (OMNRF, 2013), the 2014 Digital Raster Acquisition Project for the East (DRAPE) (OMNRF, 2014), and the 2015 Southwestern Ontario Orthophotography Project (SWOOP) (OMNRF, 2015).

Each source provides HR orthophotos (20 cm) and DEMs (2 m). To harmonize modality resolutions, we design a preprocessing pipeline that standardizes both data types for deep learning. Orthophotos are downsampled to 500×500 pixels using bicubic interpolation to ensure spatial alignment with the DEM grids, and then center-cropped to 496×496 pixels to allow clean integer scaling for multi-scale SR factors (×4, ×8, ×16) without padding.

The final dataset contains 1409 high-quality RGB–DEM pairs: 477 from DRAPE, 677 from SWOOP, and 255 from SCOOP. For benchmarking, DRAPE and SWOOP (1154 pairs) are used for training, while SCOOP (255 pairs) is reserved for testing, ensuring geographically disjoint training and test sets for evaluation.

As shown in Fig. 4, the elevation distributions reveal diverse topography. DRAPE exhibits smooth low-relief terrain (20–130 m), SCOOP features more complex landscapes (60–320 m) with multimodal elevation patterns, and SWOOP shows the widest range (67–420 m) with multiple peaks corresponding to hills, ridges, and plateaus.

Overall, GDEMSR provides a geographically diverse and topographically rich benchmark that supports robust training, validation, and fair comparison for future HRSI-guided DEM SR research. To the best of our knowledge, it is the first dataset of this scale and quality in the field, filling a critical gap in standardized evaluation for remote sensing-based DEM SR.

4.1.1. NYU-v2

It is a dataset comprising 1449 pairs of densely labeled, aligned RGB and depth images, captured using Microsoft Kinect sensors. Consistent with prior guided depth map SR methods, LR depth maps are generated by downsampling the ground truth depth maps using bicubic interpolation. The dataset is divided into two subsets: 1000 pairs for training and 449 pairs for testing.

4.2. Metrics and baselines

Following Zhang et al. (2022), we used the Root Mean Square Error (RMSE), RMSE-slope, and RMSE-aspect as the evaluation metrics for assessing the performance of the DEM SR task. These metrics jointly evaluate not only height accuracy but also the preservation of local terrain gradients and orientation, providing a more complete assessment of DEM reconstruction quality. Additionally, we employ mIoU to evaluate the semantic segmentation task.

We evaluated our GSRMTL method against SOTA open-source methods for ×4, ×8, and ×16 SR, which correspond to increasing the spatial

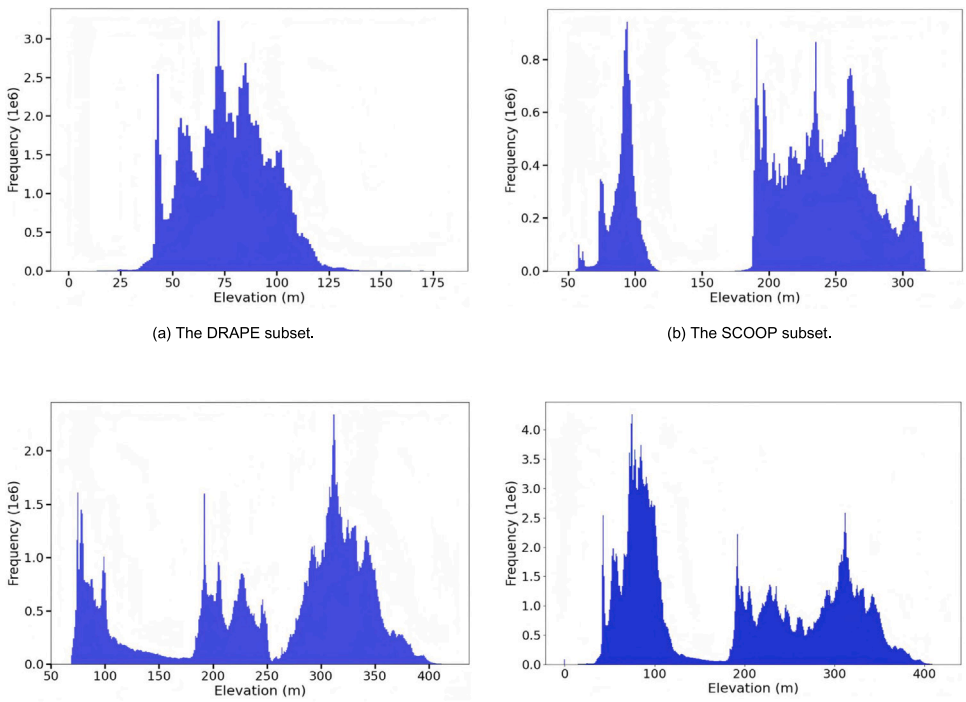

(a) The DRAPE subset.

(b) The SCOOP subset.

(c) The SWOOP subset.

(d) The whole dataset.

Fig. 4. Elevation distribution of the GDEMSR dataset.

resolution of a DEM by factors of 4, 8, and 16, respectively. The baseline methods include the traditional bicubic interpolation (implemented using OpenCV), guided depth map SR approaches (SGNet (Wang et al., 2024b), HCGNet (Cong et al., 2024)), guided DEM SR approaches (AFN (Kubade et al., 2020) and RHUMF (Tan et al., 2024)), and standalone DEM SR techniques (EBCF-CDEM (Yao et al., 2024), MASTERGAN (Mohammed et al., 2023), and DEMSR (Han et al., 2023)). For the guided depth map SR approaches, we directly cite the results of SGNet and HCGNet from their respective papers for the NYU-v2 dataset.

4.3. Implementation details

Our network was trained on a single NVIDIA GeForce RTX 3090 GPU. Both HRSIs and HR DEMs were cropped into 256 × 256 patches for efficient training. To avoid costly manual annotations on GDEMSR, we used UperNet pretrained on ImageNet and SAMRS (Wang et al., 2023) to generate pseudo-labels for semantic supervision. While significant domain shifts between SAMRS and our target scenes limit the overall semantic accuracy of these pseudo-labels, we found that salient structural cues, such as object boundaries and region contours, are generally well preserved. The model was optimized using the Adam optimizer (momentum = 0.9, learning rate = 10^{-4}, decayed ×0.2 every 5000 iterations), with a batch size of 2 and 200 epochs, taking about 38 h in total.

4.4. Comparison results and discussion

4.4.1. Quantitative comparisons on the benchmarks

Table 1 reports a comprehensive quantitative comparison on the GDEMSR dataset using RMSE (elevation), RMSE-slope, and RMSE-aspect. Across all scale factors, GSRMTL consistently achieves the best performance on all three metrics, demonstrating its superiority over existing SOTA methods. In terms of elevation accuracy, GSRMTL attains the lowest RMSE values of 1.63 m, 2.23 m, and 3.27 m at scale factors ×4, ×8, and ×16, respectively. Notably, the performance gap widens as the scale factor increases, highlighting the robustness of GSRMTL under challenging large upsampling ratios where error accumulation is more pronounced. Compared with the second-best method (SGNet), GSRMTL reduces RMSE by 0.09 m, 0.22 m, and 1.57 m at ×4, ×8, and ×16, respectively.

Beyond elevation accuracy, GSRMTL also demonstrates superior terrain structure preservation, as evidenced by its lowest RMSE-slope and RMSE-aspect across all scales. At ×16, GSRMTL achieves an RMSE-slope of 3.74° and an RMSE-aspect of 64.12°, substantially outperforming competing methods such as AFN, RHUMF, and SGNet.

In contrast, methods such as MASTERGAN and AFN show competitive performance in certain slope or aspect metrics at smaller scales but exhibit significant performance degradation at higher scales, particularly in elevation RMSE. This suggests limited robustness when handling large-scale SR tasks. SGNet achieves strong results due to its edge-preserving design, but it falls short of GSRMTL in capturing higher-order geometric properties, especially at ×16.

Table 2 reports the quantitative comparison on the NYU-v2 dataset. At ×4, SGNet achieves the best RMSE (1.10 cm), while GSRMTL ranks a close second (1.12 cm), indicating highly competitive performance in low-scale upsampling. At ×8, GSRMTL matches SGNet with the lowest RMSE of 2.44 cm. Notably, at the most challenging ×16 scale, GSRMTL achieves the best performance (4.71 cm), slightly outperforming SGNet (4.77 cm) and HCGNet (4.85 cm).

The small performance gap between GSRMTL and SGNet on NYU-v2 can be attributed to dataset characteristics. NYU-v2 is a long-established indoor benchmark with largely saturated performance. In addition, indoor scenes are visually cluttered and exhibit weaker semantic–depth correlations than outdoor remote sensing imagery, limiting the benefits of auxiliary semantic guidance. Consequently, observable gains are constrained on NYU-v2, whereas GSRMTL shows clearer advantages in scenarios where high-resolution optical imagery provides stronger priors for elevation reconstruction.

4.4.2. Visualization comparison

Columns (1) through (5) in Fig. 5 present different spatial scenes, with zoomed-in insets provided to emphasize fine structures and elevation transitions. Overall, GSRMTL delivers sharper and more topographically accurate results, particularly in areas featuring abrupt

Table 1
Quantitative comparison with SOTA methods on the GDEMSR dataset using RMSE, RMSE-slope, and RMSE-aspect at scale factors ×4, ×8, and ×16.

Methods	RMSE (m)			RMSE-Slope (°)			RMSE-Aspect (°)		
	×4	×8	×16	×4	×8	×16	×4	×8	×16
Bicubic	2.32	3.23	5.17	7.40	9.16	10.65	55.40	64.45	71.48
MASTERGAN (Mohammed et al., 2023)	1.97	2.70	5.37	2.75	3.38	3.88	53.15	63.61	76.17
DEMSR (Han et al., 2023)	5.00	6.97	10.58	3.17	3.81	4.45	61.71	73.50	80.16
AFN (Kubade et al., 2020)	2.52	2.64	4.52	3.13	3.51	4.09	53.67	63.27	71.53
RHUMF (Tan et al., 2024)	1.99	3.39	5.92	3.11	3.63	4.05	53.58	62.89	70.68
SGNet (Wang et al., 2024b)	1.72	2.45	4.84	2.97	3.35	4.05	55.10	59.00	71.00
HCGNet (Cong et al., 2024)	2.07	3.15	10.88	2.90	3.48	6.01	59.95	66.32	87.86
EBCF-CDEM (Yao et al., 2024)	2.29	3.13	5.07	3.07	3.60	4.05	58.36	65.99	73.72
GSRMTL(ours)	1.63	2.23	3.27	2.57	3.32	3.74	51.03	58.61	64.12

The best and second-best RMSE values are highlighted in red and blue, respectively.

Table 2
Quantitative comparison with SOTA methods on the NYU-v2 dataset at scale factors ×4, ×8, and ×16.

Methods	NYU-v2 (cm)		
	×4	×8	×16
Bicubic	4.71	8.28	13.17
MASTERGAN (Mohammed et al., 2023)	2.71	4.53	9.50
DEMSR (Han et al., 2023)	4.55	7.46	12.02
AFN (Kubade et al., 2020)	3.91	6.86	10.92
RHUMF (Tan et al., 2024)	4.66	7.76	12.04
SGNet (Wang et al., 2024b)	1.10	2.44	4.77
HCGNet (Cong et al., 2024)	1.22	2.53	4.85
EBCF-CDEM (Yao et al., 2024)	3.92	7.37	12.12
GSRMTL(ours)	1.12	2.44	4.71

The best and second-best performances are highlighted in red and blue, respectively.

Table 3
Complexity and Efficiency Analysis.

Method	Params (MB)	Inference time (ms)
SGNet (Wang et al., 2024b)	230.9	176.9
HCGNet (Cong et al., 2024)	173.4	12.3
EBCF-CDEM (Yao et al., 2024)	17.3	28.0
MASTERGAN (Mohammed et al., 2023)	8.3	56.7
DEMSR (Han et al., 2023)	12.2	7.3
AFN (Kubade et al., 2020)	60.2	51
RHUMF (Tan et al., 2024)	313.5	108
GSRMTL (w/o DHS)	44.9	55.7
GSRMTL (ours)	53.1	79.5

elevation changes or complex terrain. On the NYU-v2 dataset, GSRMTL achieves performance comparable to SGNet for guided depth-map SR, as shown in Fig. 6. Relative to existing guided DEM SR methods such as AFN and RHUMF, GSRMTL exhibits distinct qualitative advantages on depth data, including sharper boundary delineation, fewer reconstruction artifacts in smooth regions, and better preservation of fine structural details, resulting in more spatially consistent and visually realistic surfaces.

4.4.3. Model efficiency

In this section, we evaluate the efficiency of our proposed GSRMTL method compared to the SOTA methods. The evaluation focuses on two key metrics: model complexity measured by the number of parameters (Params in MB) and inference time (in milliseconds). These metrics are crucial for understanding the practical applicability of each model, especially in real-time or resource-constrained environments.

The detailed results in Table 3 highlight the following key points: SGNet excels in performance but suffers from high parameter complexity (230.9 MB) and long inference times (176.9 ms). The inefficiency of SGNet is primarily attributed to its Spectrum Differencing Block, which significantly increases the computational load. In contrast, HCGNet offers a good balance between parameter size (173.4 MB) and inference speed (12.3 ms), making it a strong contender for real-time tasks. AFN achieves reasonable efficiency with moderate parameter sizes and faster inference times. In contrast, RHUMF employs a UNet-based architecture that, while effective, incurs a high computational cost. EBCF and MASTERGAN provide lightweight alternatives with reasonable inference times (28.0 ms and 56.7 ms, respectively), though their performance may not match that of more complex models. DEMSR stands out for its minimal parameter size (12.2 MB) and extremely fast inference time (7.3 ms), though it may compromise on performance in certain scenarios. Our proposed GSRMTL method achieves a favorable balance, with 53.1 MB of parameters and an inference time of 79.5 ms, delivering robust performance while maintaining practical efficiency for diverse SR tasks.

4.5. Hyperparameter settings and ablation studies

4.5.1. Hyperparameter settings

In this section, we analyze the impact of the loss weights λ_1 and λ_2 on model performance at scale ×8. Since $\lambda_1 + \lambda_2 = 1$, we focus on varying λ_1, with λ_2 automatically adjusted as $1 - \lambda_1$. The experimental results presented in Fig. 7 show that the model achieves relatively stable performance across different λ_1 values. Specifically, when λ_1 is set to 0.95, the lowest RMSE of 2.23 is achieved, indicating slightly better performance compared to other settings. For values of λ_1 ranging from 0.1 to 1.0, the RMSE remains within a narrow range of 2.23–2.28, suggesting that the model is not highly sensitive to moderate changes in

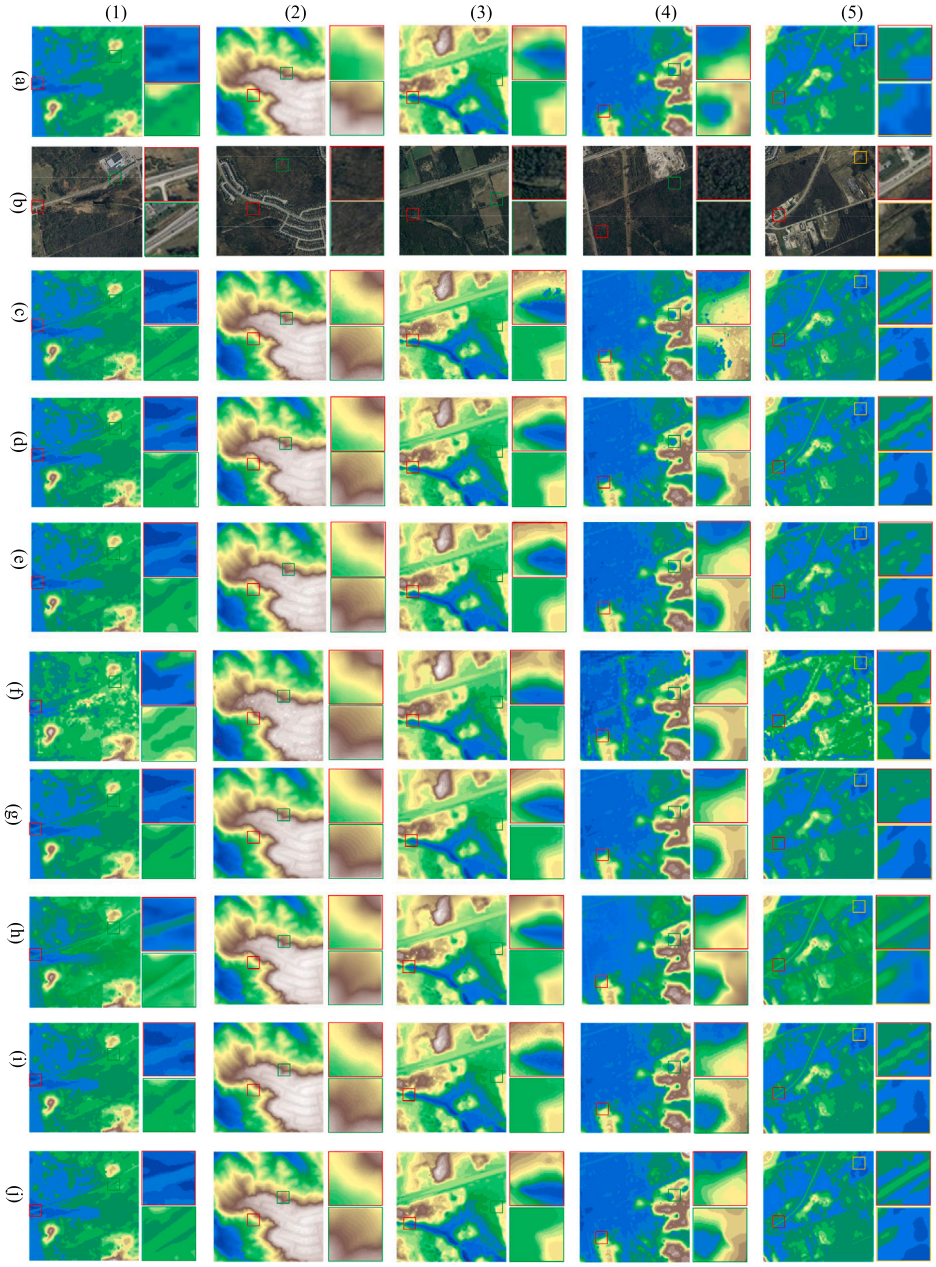

Fig. 5. Visual comparison of prediction results of SR methods on the GDEMSR dataset at the scale factor of ×8. The images from top to bottom show: (a) LR DEM, (b) HRSI, (c) HR DEM, followed by the predicted results of various models, including (d) MASTERGAN, (e) EBCF-CDEM, (f) AFN, (g) RHUMF, (h) SGNet, (i) HCGNet, and (j) the proposed GSRMTL.

λ_1. Overall, these results demonstrate that the model performs robustly within a reasonable range of λ_1.

4.5.2. Ablation studies

To comprehensively evaluate the impact of different components within our proposed GSRMTL network, we conducted ablation studies on GDEMSR. The focus is on assessing the effectiveness of three key modules: the ACMF module, the number of HRSI branches (1 and 2), and the Semantic Segmentation Head. For each ablation setting, the corresponding component is removed while all other network configurations are kept unchanged. When the ACMF module is excluded, features from the HRSI guidance stream and the DEM stream are fused using element-wise addition, followed by two 3 × 3 convolutional layers with a stride of 1, instead of the proposed attention-based fusion. Performance changes relative to the full model are then analyzed to quantify the impact of each component on DEM super-resolution accuracy.

We begin with a baseline that includes only DHS and SSH while excluding ACMF. This setting achieves RMSEs of 1.651 m, 2.271 m, and 3.317 m at scales ×4, ×8, and ×16, respectively (see Table 4). When one branch of the DHS is removed, the model's performance slightly declines at the finest scale (×4) and exhibits more pronounced degradation at ×8 and ×16. This highlights the benefit of jointly leveraging complementary visual cues from dual HRSI streams. This accuracy gain comes with modest overhead—model size grows from 44.9 MB to 53.1 MB and inference time from 55.7 ms to 79.5 ms per sample—yielding a favorable trade-off between performance and efficiency. Similarly, removing SSH while keeping ACMF and DHS leads to moderate performance drops, especially at ×8 and ×16. These results are particularly significant as they confirm that even the pseudo-labels used for semantic supervision, despite potential noise, provide

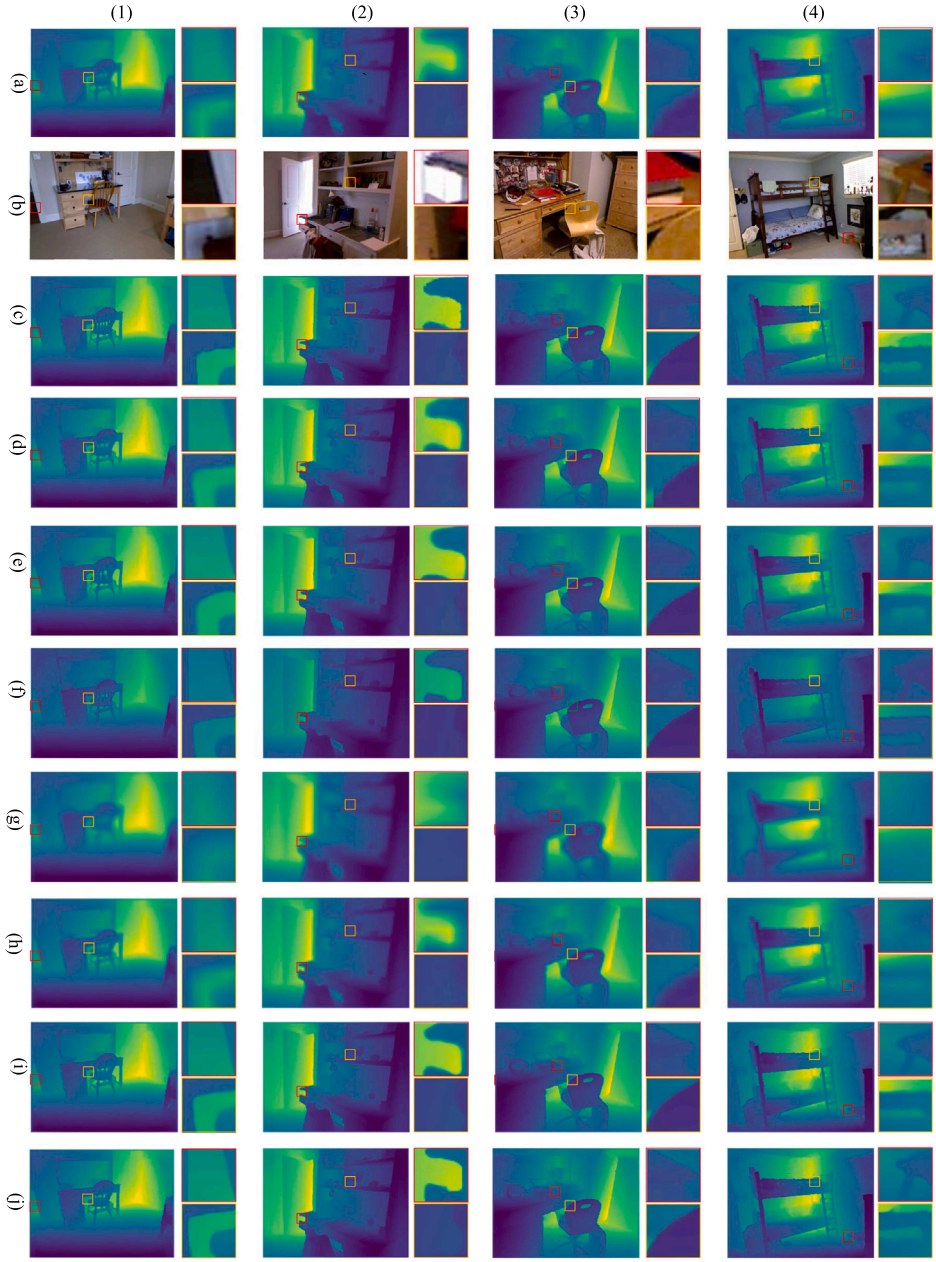

Fig. 6. Visual comparison of prediction results of SR methods on NYU-v2 at the scale factor of ×8. The images from top to bottom show: (a) LR DEM, (b) HRSI, (c) HR DEM, followed by the predicted results of various models, including (d) MASTERGAN, (e) EBCF-CDEM, (f) AFN, (g) RHUMF, (h) SGNet, (i) HCGNet, and (j) the proposed GSRMTL.

meaningful semantic and structural information that helps guide the SR process.

The full model, which integrates ACMF, DHS, and SSH, achieves the best results across all scales: 1.632 m at ×4, 2.225 m at ×8, and 3.273 m at ×16. at the ×4 scale, it achieves an mIoU of 10.5% for the semantic segmentation task. This result reflects the inherent difficulty of learning reliable semantic representations from pseudo-labels generated in a cross-domain setting, while still demonstrating that the segmentation branch learns meaningful and non-trivial visual features. Importantly, these learned semantic cues are sufficient to provide effective auxiliary supervision that benefits DEM super-resolution, as evidenced by the consistent performance gains observed in our ablation studies

These outcomes demonstrate that all three modules are complementary and contribute significantly to the overall performance. Notably, the largest improvements are observed at coarser scales, indicating that cross-modal feature fusion and auxiliary semantic supervision play crucial roles in enhancing the reconstruction of fine-grained elevation details at higher upsampling factors.

5. Conclusion

This paper presents GSRMTL, a multi-task learning framework for HRSI-guided DEM super-resolution that effectively integrates optical and elevation information through a dual HRSI subnetwork, an attention-based cross-modal fusion module, and semantic guidance. To facilitate fair evaluation, we introduce GDEMSR, the first large-scale open-source dataset dedicated to HRSI-guided DEM SR, offering diverse real-world samples for benchmarking. Extensive experiments on GDEMSR and NYU-v2 demonstrate that GSRMTL achieves SOTA performance, with ablation studies validating the contributions of semantic guidance and cross-modal fusion. This work establishes a strong foundation for future research in guided DEM SR and related applications.

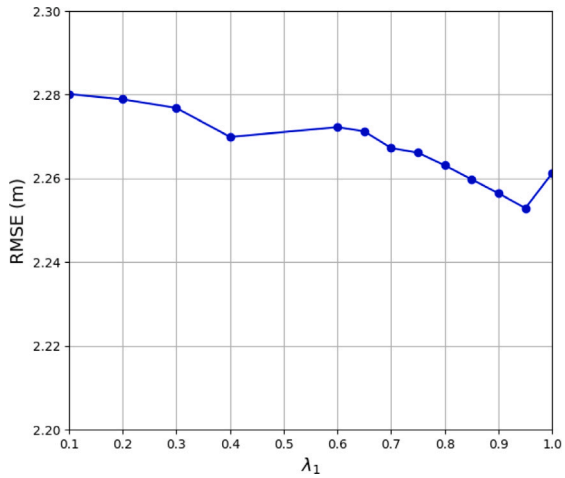

Fig. 7. Impact of loss weight λ_1 on model performance at scale ×8 on GDEMSR.

Table 4
Ablation studies on the GDEMSR dataset at all three scales.

ACMF	DHS	SSH	Scale	RMSE
×	✓	✓	×4	1.651
			×8	2.271
			×16	3.317
✓	×	✓	×4	1.650
			×8	2.269
			×16	3.307
✓	✓	×	×4	1.649
			×8	2.250
			×16	3.322
✓	✓	✓	×4	1.632
			×8	2.225
			×16	3.273

DHS denotes the Dual HRSI Subnetwork, and SSH denotes the Semantic Segmentation Head. "–" indicates not applicable, while "×" signifies the removal of the corresponding component.

CRediT authorship contribution statement

Wei Liu: Supervision, Methodology, Conceptualization, Writing – Original Draft, and Revision. **Yuhang Zhong:** Methodology, Experimental validation, Performance analysis. **Shida Zhao:** Methodology, Model implementation, Data curation. **Songling Luo:** Data preprocessing, Data curation. **Yongtao Yu:** Manuscript review, Scientific discussion. **Xiaomei Zhong:** Literature review, Manuscript review, Data curation. **Weikai Tan:** Manuscript review. **Haiyan Guan:** Manuscript review, Scientific discussion. **Hongjie He:** Manuscript review, Scientific discussion. **Jonathan Li:** Methodological direction, Scientific discussion.

All authors have read and approved the final version of the manuscript.

Declaration of competing interest

The authors declare that they have no known competing financial interests or personal relationships that could have appeared to influence the work reported in this paper.

Acknowledgments

This work was supported by the National Natural Science Foundation of China (No. 62461026, 42371447) and the Natural Science Foundation of Jiangxi Province (20252BAC220012, 20242BAB26023).

Data and code availability statement

In the interest of reproducibility and to support future research, we will make the source code and dataset associated with this work publicly available at: https://github.com/YuspaceCraft/DEMSR.

References

Argudo, O., Chica, A., Andujar, C., 2018. Terrain super-resolution through aerial imagery and fully convolutional networks. In: Comput. Graph. Forum. pp. 101–110.
Chen, Z., Han, X., Ma, X., 2024. Combining contextual information by integrated attention mechanism in convolutional neural networks for digital elevation model super-resolution. IEEE Trans. Geosci. Remote Sens. 62.
Cong, R., Sheng, R., Wu, H., Guo, Y., Wei, Y., Zuo, W., Zhao, Y., Kwong, S., 2024. Learning hierarchical color guidance for depth map super-resolution. IEEE Trans. Instrum. Meas. 1–13.
De Lutio, R., Becker, A., D'Aronco, S., Russo, S., Wegner, J.D., Schindler, K., 2022. Learning graph regularisation for guided super-resolution. In: CVPR. pp. 1979–1988.
Demiray, B.Z., Sit, M., Demir, I., 2021. DEM super-resolution with efficientnetv2. arXiv:2109.09661.
Deng, X., Dragotti, P.L., 2019. Deep coupled ista network for multi-modal image super-resolution. IEEE Trans. Image Process. 29, 1683–1698.
Gao, B., Yue, L., Qiu, Z., Yuan, Q., Shen, H., 2025. Exploring the integration of auxiliary modal information from remote sensing images for dem super-resolution. Int. J. Geogr. Inf. Sci. 1–27.
Han, X., Ma, X., Li, H., Chen, Z., 2023. A global-information-constrained deep learning network for digital elevation model super-resolution. Remote. Sens. 15, 305.
He, K., Zhang, X., Ren, S., Sun, J., 2015. Delving deep into rectifiers: Surpassing human-level performance on imagenet classification. In: ICCV. pp. 1026–1034.
Huang, W., Sun, Q., Guo, W., Xu, Q., Ma, J., Gao, T., Yu, A., 2024. DEM super-resolution guided by shaded relief using attention-based fusion. Int. J. Appl. Earth Obs. Geoinf. 132, 104014.
Kim, B., Ponce, J., Ham, B., 2021. Deformable kernel networks for joint image filtering. Int. J. Comput. Vis. 129, 579–600.
Kubade, A., Patel, D., Sharma, A., Rajan, K.S., 2020. AFN: Attentional feedback network based 3d terrain super-resolution. In: ACCV.
Li, Y., Huang, J.B., Ahuja, N., Yang, M.H., 2019. Joint image filtering with deep convolutional networks. IEEE Trans. Pattern Anal. Mach. Intell. 41, 1909–1923.
Li, Z., Zhu, X., Yao, S., Yue, Y., García-Fernández, Á.F., Lim, E.G., Levers, A., 2023. A large scale digital elevation model super-resolution transformer. Int. J. Appl. Earth Obs. Geoinf. 124, 103496.
Liu, W., Kang, Z., Liu, J., Lin, Y., Yu, Y., Li, J., 2024. A multitask cnn-transformer network for semantic change detection from bi-temporal remote sens. images. IEEE Trans. Geosci. Remote Sens. 62.
Liu, P., Zhang, Z., Meng, Z., Gao, N., 2021. Deformable enhancement and adaptive fusion for depth map super-resolution. IEEE Signal Process. Lett. 29, 204–208.
Mohammed, A., Kashif, M., Zama, M.H., Ansari, M.A., Ali, S., 2023. Master gan: Multiple attention is all you need: A multiple attention guided super resolution network for dems. In: IGARSS. pp. 5154–5157.
OMNRF, 2013. South central ontario orthophotography project (SCOOP) 2013. https://uwaterloo.ca/library/geospatial/south-central-ontario-orthophotography-project-scoop-2013.
OMNRF, 2014. Digital raster acquisition project eastern ontario (DRAPE) 2014. https://uwaterloo.ca/library/geospatial/collections/aerial-photographs-satellite-and-orthoimagery/digital-raster-acquisition-project-east-drape-imagery-2014.
OMNRF, 2015. South central ontario orthophotography project (SCOOP) 2015. https://uwaterloo.ca/library/geospatial/southwestern-ontario-orthophotography-project-swoop-2015.
Paul, S., Gupta, A., 2024. A sinkhorn regularized adversarial network for image guided dem super-resolution using frequency selective hybrid graph transformer. arXiv:2409.14198.
Silberman, N., Hoiem, D., Kohli, P., Fergus, R., 2012. Indoor segmentation and support inference from rgbd images. In: ECCV. pp. 746–760.
Tan, W., Qin, N., Zhang, Y., McGrath, H., Fortin, M., Li, J., 2024. A rapid high-resolution multi-sensory urban flood mapping framework via dem upscaling. Remote Sens. Environ. 301, 113956.
Tang, Q., Cong, R., Sheng, R., He, L., Zhang, D., Zhao, Y., Kwong, S., 2021. Bridgenet: A joint learning network of depth map super-resolution and monocular depth estimation. In: ACM MM. pp. 2148–2157.
Wang, Y., Jin, S., Yang, Z., Guan, H., Ren, Y., Cheng, K., Zhao, X., Liu, X., Chen, M., Liu, Y., et al., 2024a. TTSR: A transformer-based topography neural network for digital elevation model super-resolution. IEEE Trans. Geosci. Remote Sens. 62, 1–19.
Wang, J., Sun, L., Xiong, R., Shi, Y., Zhu, Q., Yin, B., 2021. Depth map super-resolution based on dual normal-depth regularization and graph laplacian prior. IEEE Trans. Circuits Syst. Video Technol. 32, 3304–3318.

Wang, Z., Yan, Z., Yang, J., 2024b. SGNet: Structure guided network via gradient-frequency awareness for depth map super-resolution. In: AAAI. pp. 5823–5831.

Wang, Z., Yan, Z., Yang, M.H., Pan, J., Yang, J., Tai, Y., Gao, G., 2024c. Scene prior filtering for depth map super-resolution. arXiv:2402.13876.

Wang, D., Zhang, J., Du, B., Xu, M., Liu, L., Tao, D., Zhang, L., 2023. SAMRS: Scaling-up remote sensing segmentation dataset with segment anything model. NeurIPS 36, 8815–8827.

Wu, Z., Zhao, Z., Ma, P., Huang, B., 2021. Real-world dem super-resolution based on generative adversarial networks for improving insar topographic phase simulation. IEEE J. Sel. Top. Appl. Earth Obs. Remote. Sens. 14, 8373–8385.

Yan, Z., Wang, K., Li, X., Zhang, Z., Li, G., Li, J., Yang, J., 2022. Learning complementary correlations for depth super-resolution with incomplete data in real world. IEEE Trans. Neural Netw. Learn. Syst. 35, 5616–5626.

Yao, S., Cheng, Y., Yang, F., Mozerov, M.G., 2024. A continuous digital elevation representation model for dem super-resolution. ISPRS J. Photogramm. Remote Sens. 208, 1–13.

Yu, J., Lin, Z., Yang, J., Shen, X., Lu, X., Huang, T.S., 2019. Free-form image inpainting with gated convolution. In: ICCV. pp. 4471–4480.

Zhang, Y., Li, K., Li, K., Wang, L., Zhong, B., Fu, Y., 2018. Image super-resolution using very deep residual channel attention networks. In: ECCV. pp. 286–301.

Zhang, Y., Yu, W., Zhu, D., 2022. Terrain feature-aware deep learning network for digital elevation model superresolution. ISPRS J. Photogramm. Remote Sens. 189, 143–162.

Zheng, X., Xu, Z., Yin, Q., Bao, Z., Chen, Z., Wang, S., 2024. A transformer-unet generative adversarial network for the super-resolution reconstruction of dems. Remote. Sens. 16, 3676.

Zhong, Z., Liu, X., Jiang, J., Zhao, D., Chen, Z., Ji, X., 2021. High-resolution depth maps imaging via attention-based hierarchical multi-modal fusion. IEEE Trans. Image Process. 31, 648–663.

Zhong, Z., Liu, X., Jiang, J., Zhao, D., Ji, X., 2023. Guided depth map super-resolution: A survey. ACM Comput. Surv. 55, 1–36.

Zuo, Y., Wang, H., Fang, Y., Huang, X., Shang, X., Wu, Q., 2021. Mig-net: Multi-scale network alternatively guided by intensity and gradient features for depth map super-resolution. IEEE Trans. Multimed. 24, 3506–3519.